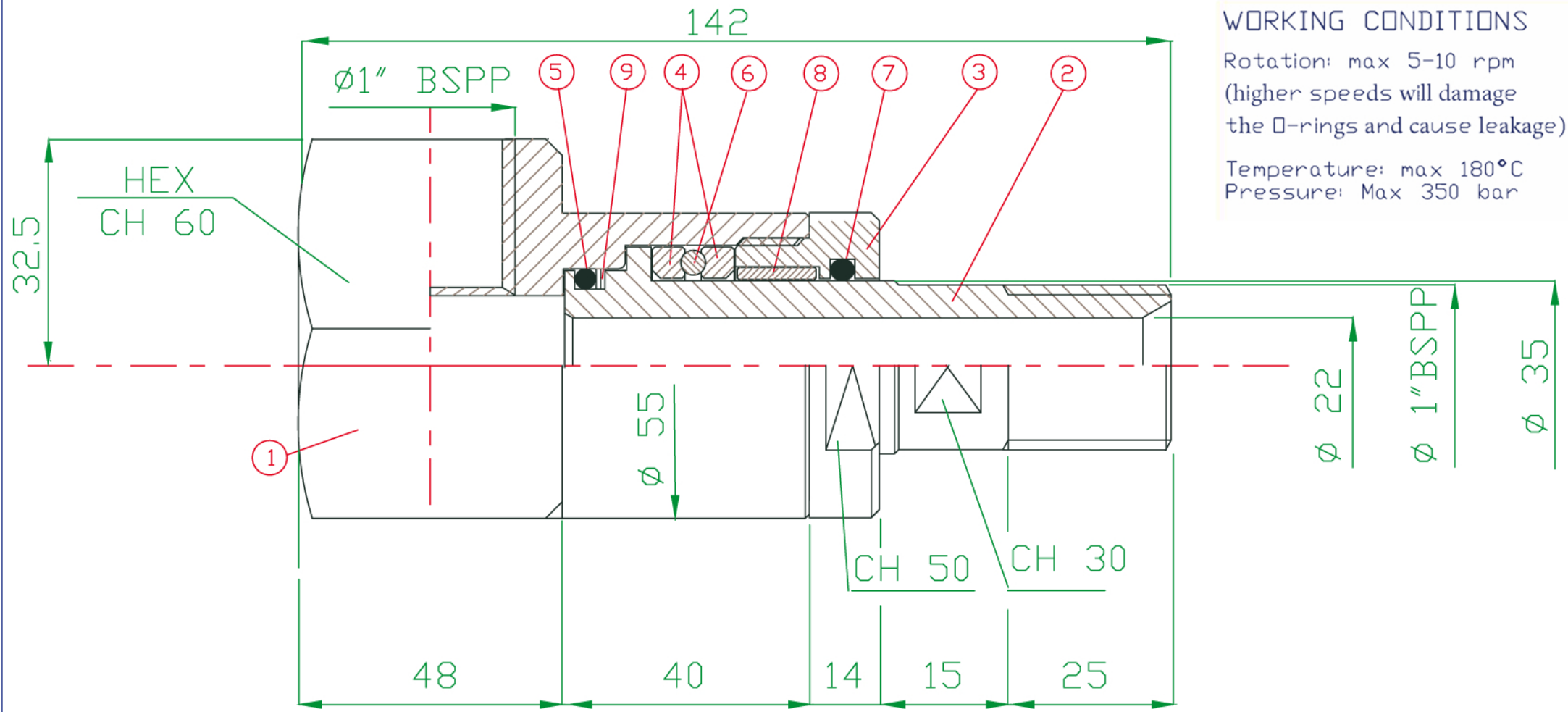

WORKING CONDITIONS

Rotation: max 5-10 rpm
(higher speeds will damage
the O-rings and cause leakage)

Temperature: max 180°C
Pressure: Max 350 bar

PART.No	DESCRIPTION	DRW CODE	MATERIAL	Q.TY
5	ORing	502025-05	FKM	1
4	Ball Guide	502025-04	Hardened Steel	2
3	Nut	502025-03	316SS	1
2	Turning Shaft	502025-02	316SS	1
1	Housing	502025-01	316SS	1
9	BACK UP RING	502025-09	PTFE	1
8	ROLLERS	502025-08	SKF	45
7	ORing	502025-07	FKM	1
6	BALLS	502025-06	AISI 52100	25

QPlus

90° Swivel Joint Ø1" M/F	502025	30/08/07
	N. Disegno	Data
DENOMINAZIONE	Cliente	Note